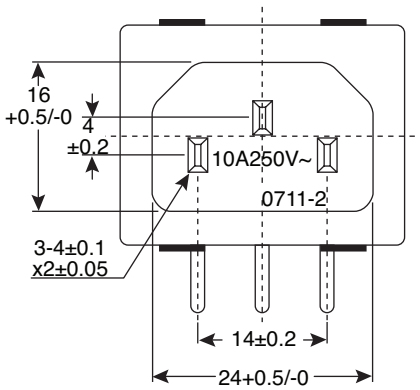

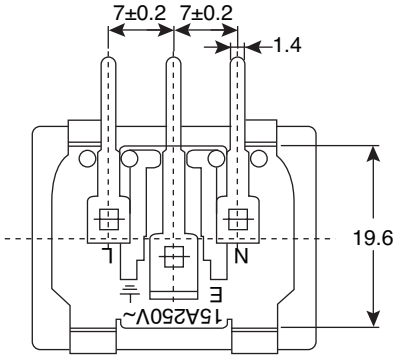

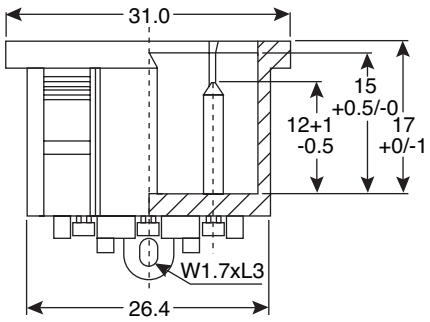

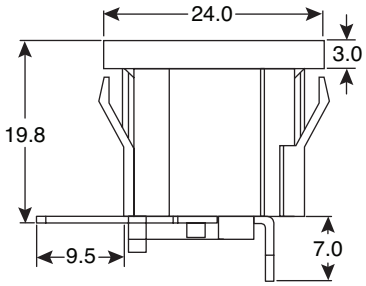

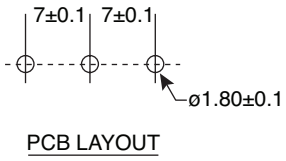

PCB LAYOUT

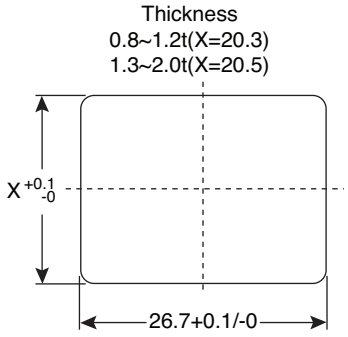

PANEL CUT-OUT

DIMENSIONS: mm

ELECTRICAL SPECIFICATIONS	
Rating:	10A 250V~
Insulation resistance:	100MΩ min. @ 500VDC
Electric strength:	AC 2,000V for one minute
RoHS Compliant	

MATERIAL SPECIFICATIONS	
Housing:	Nylon 66
Terminal:	Copper alloy, tin plated